# INDEX

## 2.1 TRAVELLING COLUMN MILLING MACHINES

The machine is structurally composed of a bed 1 fixed to the foundations, on which a carriage 2 travels in a longitudinal direction, bearing travelling column 3. The column is equipped with a knee 4 (vertical travel) which, in turn, is equipped with a ram 5 (cross travel). The front face of the ram is equipped with the various milling heads.

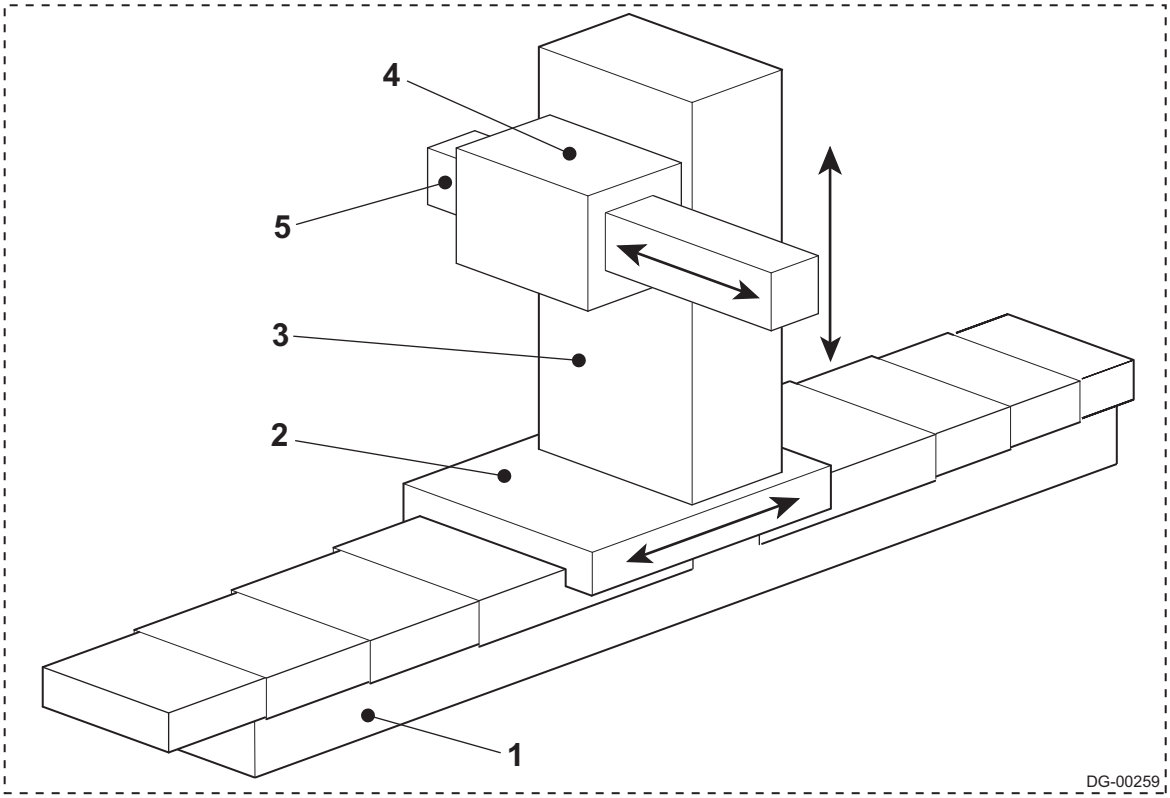


The machine has no incorporated system for clamping workpieces.
The area in front of the machine must therefore be equipped with clamping platens, worktables (rotating, sliding or rotating-sliding) or other appropriate devices.

### 2.1.1 GUIDE SYSTEM

Movement is by means of steel or cast iron milled prismatic guides. The counterguides are machined with pockets into which oil is injected under pressure, to achieve hydrostatic lift. In this way a thin film of oil is maintained between moving parts, thereby ensuring low friction travel without stick-slip effects and remaining virtually wear-free.
Oil pressure acts on opposing 2 to 2 surfaces, to obtain constant pre-loading to increase system stability.

### 2.1.2 POSITION READING SYSTEMS

Positions are read directly on the moving parts by means of high precision linear optical rules, one on each axis.

## 2.1.3 AXIS MOVEMENT KINEMATIC SYSTEM

### 2.1.3.1 Vertical axis traverse kinematic system

Drive is transmitted by a digitally or analogically controlled A.C. brushless motor (1) by means of a toothed belt (2) to a recirculating ball screw (3). Rotation of the screw causes the nut (4) to advance or retract, taking with it the relative machine unit (5).
The nut is equipped with a large number of ball circuits and is accurately preloaded by the manufacturer to ensure total absence of play and the maximum rigidity.
The ball screws are supported at both ends, although they are axially restrained at one end only to avoid the generation of axial stress that would negatively affect the precision and lifetime of the machine.

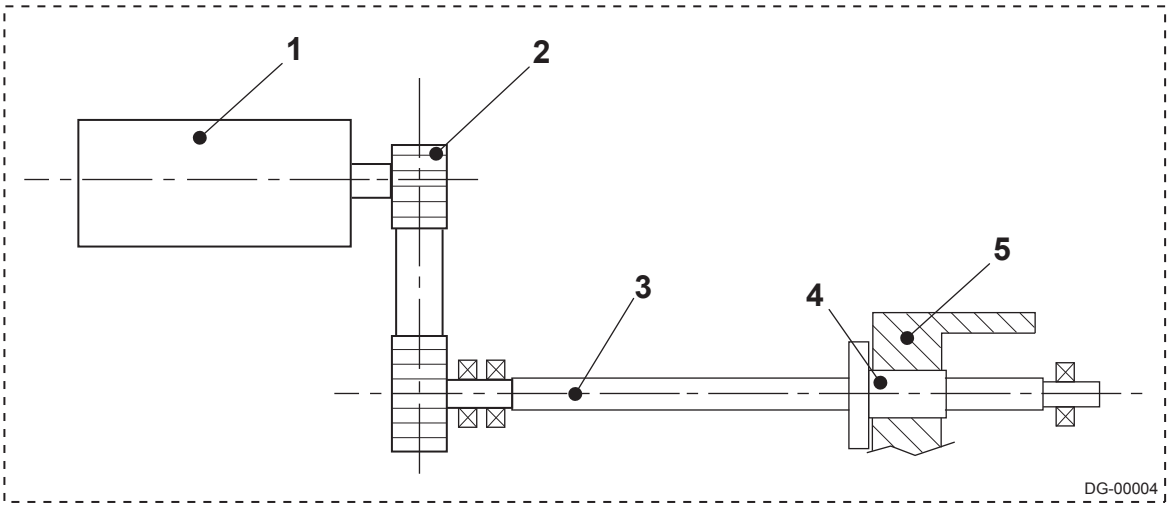

### 2.1.3.2 Transverse axis traverse kinematic system

Movement is transmitted by the digitally controlled AC brushless motor (1) fixed to the slide-holder carriage. Driving pulley (2) transmits drive to driven pulley (3) by way of a cog belt (4), directly on lead nut (6) of recirculating ball screw (5).
The screw (5) is secured at the two ends; axial movement of the screw (5) causes movement of the slide (7) to which it is rigidly attached.

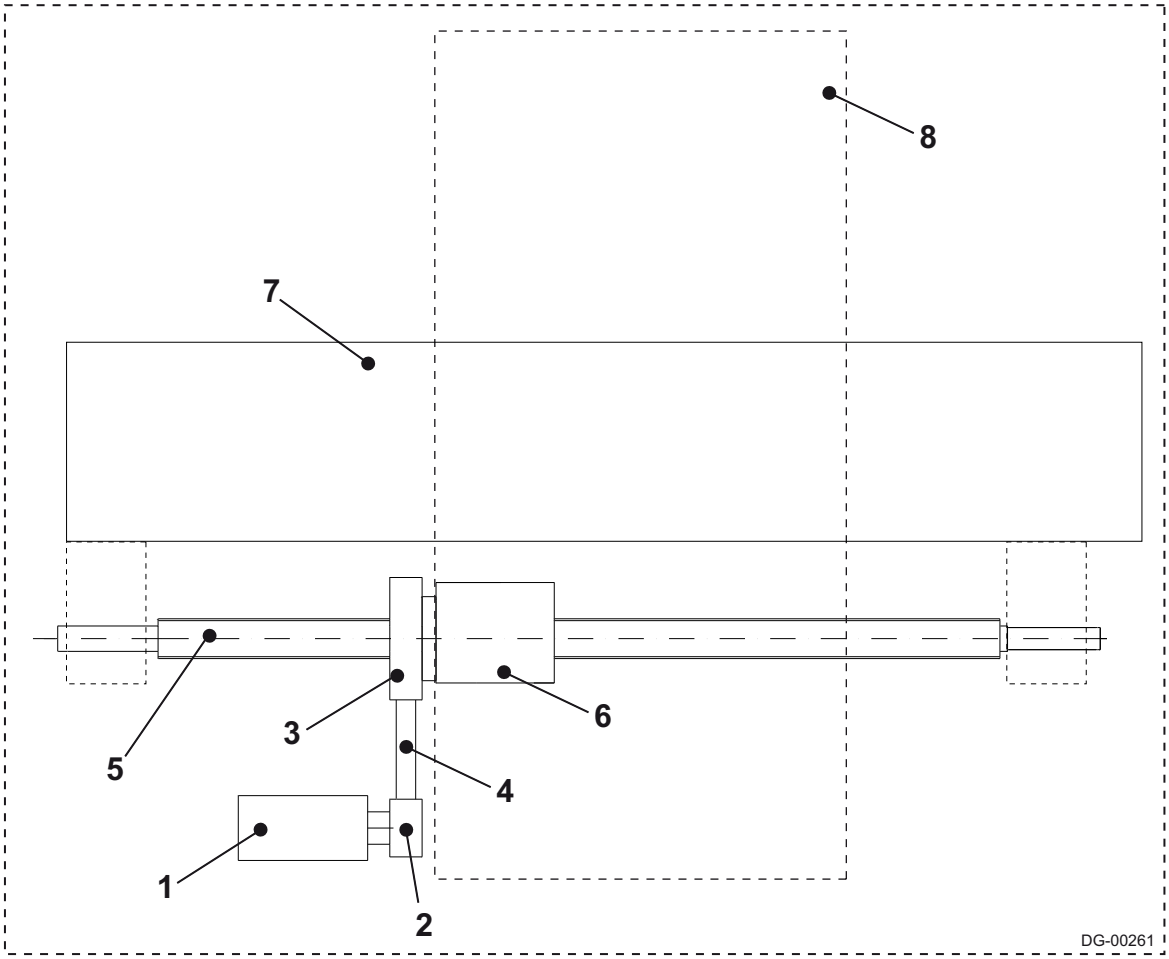

### 2.1.3.3 Kinematik translation of the longitudinal axis

The motion is transmitted from 2 A.C. Brushless motors and has a digital or analog control, coupled to 2 epicycloid reducers in an oil bath(2), positionned on the colums side (3).

THE TAKE UP OF SLACK SYSTEM
The take up of slack system is realised electronically, with a software by itself.

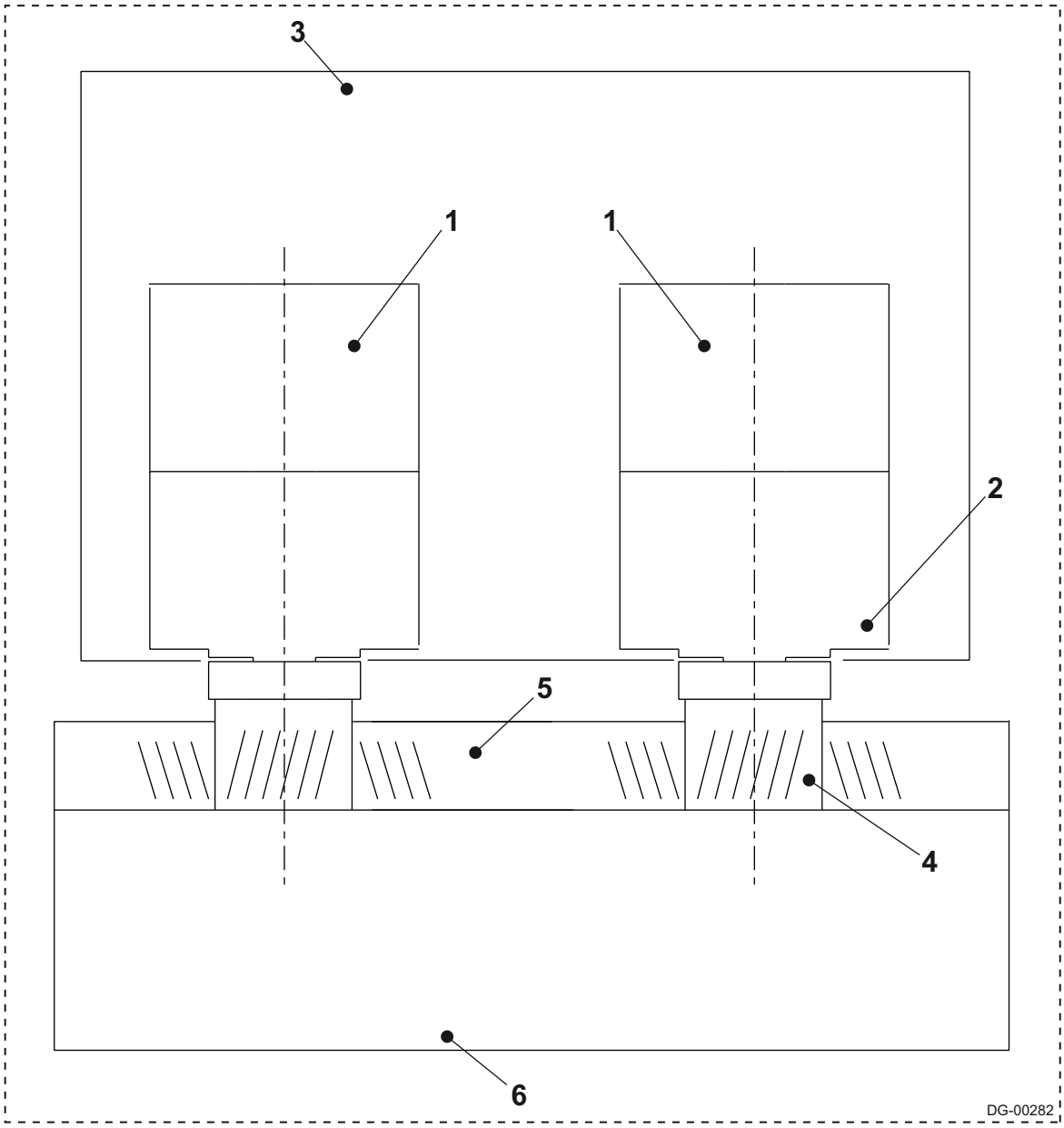


## 2.1.4 VERTICAL MOVEMENTS BALANCING SYSTEM

The weights of the knee, ram and milling head are balanced by means of a hydraulic circuit. Circuit pressure is maintained by a series of nitrogen accumulators.

### 2.1.5 CROSS MOVEMENT COMPENSATION SYSTEM

A sophisticated electronically controlled hydraulic system ensures that machine geometry is maintained when the ram travels along its axis and hence when the centre of gravity is displaced. The compensation system generates variable forces that are opposed to the movement of mass related forces. The compensation action is modulated in relation to the mass of the installed milling head.

### 2.1.6 MILLING HEAD ATTACHMENT AND CONNECTION SYSTEM (AAC)

The milling heads are fastened to the front face of the ram by means of four hydraulically operated clamps which engage with four corresponding shanks on the heads. Precision of positioning is guaranteed by two taper dowels. When the heads are mounted to the ram an auto-connect system means that all electrical, hydraulic and pneumatic connections are made automatically.
To perform head attachment and removal procedures correctly, use storage cradles or the automatic milling head magazine.

## 2.1.7 THERMAL STABILISATION OF THE MACHINE

The causes of thermal deformation may also be internal to the machine, because during its operation various parts will become hot, including lead screws, guideways, motors and spindles.
These causes must be taken into account when the machine changes from an initial thermal condition to a new and different thermal condition.

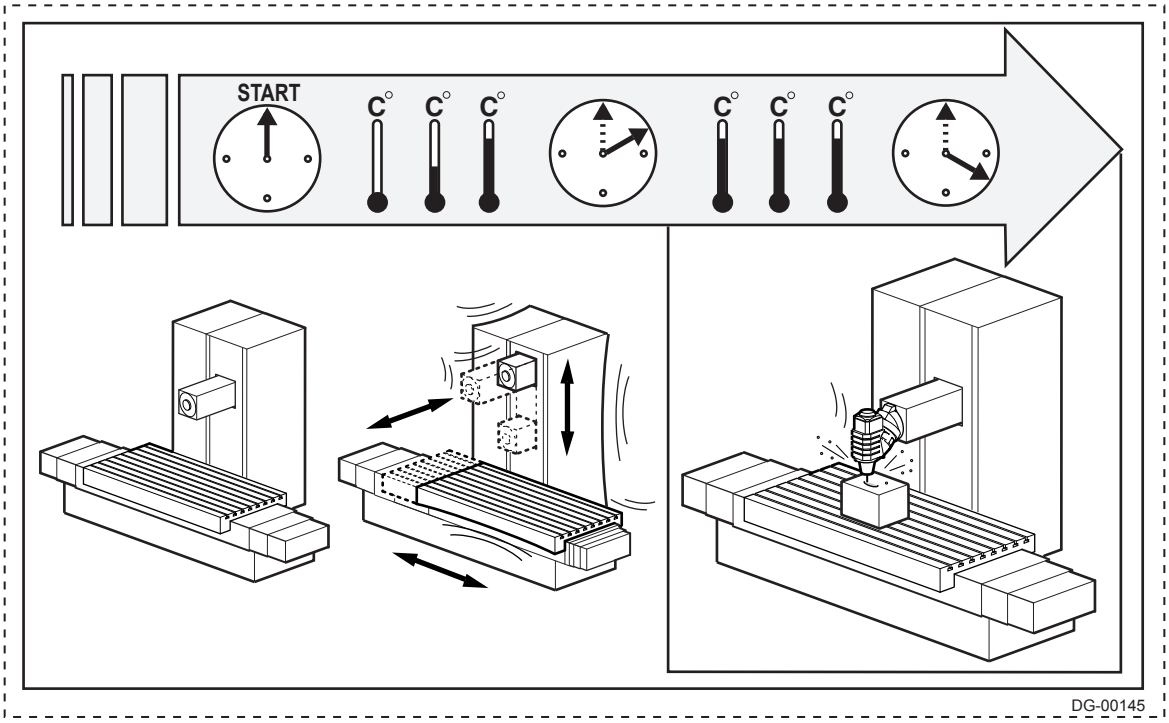


***To optimise the precision of machining work, especially finishing, ensure that the machine has reached "steady-state temperature" in the conditions in which the finishing work will be carried out.***

### 2.1.7.1 Axes preheating

In general, when the machine is started cold we recommend executing 15 minutes of movements of the traversing axes at the following feedrates:

| MACHINE | Feedrate [mm/min] | Recommended travel [mm] |
|---|---|---|
| Dino, Raid, Stinger, Dinomax | 10000 | 1/3 axis travel |
| Spazio,Lem, Sirio, Area, Arx, Spirit | 4000 | 1/3 axis travel |
| Pragma, Ronin, Verus, Tessen | 8000 | 1/3 axis travel |
| Synthesis, Castel Red | 6000 | 1/3 axis travel |

TIN-0094

In this time interval the axes motors reach the optimum temperature conditions thereby minimising possible thermal shifts due to heating of structural components in the area around the motors.

### 2.1.7.2 Preheating of HSK Electrospindles

**Table of preheating cycle rotation speeds (with cold starting)**

| HEAD | Preheating cycles speed [rpm] | Preheating time [minutes] |
|---|---|---|
| Fischer electrospindle | 10000 | 15 |
| Omlat electrospindle | 10000 | 15 |
| | | TIN-0095 |

### 2.1.7.3 Preheating of ISO 40 and ISO 50 Mechanical Spindles

**Table of preheating cycle rotation speeds (with cold starting)**

| HEAD | Preheating cycles speed [rpm] | Preheating time [minutes] |
|---|---|---|
| Universal head | 2500 | 15 |
| Spindle extension | Max. speed x 0.5 | 15 |
| Mechanical Autolato head | Max. speed x 0.5 | 15 |
| Mechanical Twist head | Max. speed x 0.5 | 15 |
| | | TIN-0096 |

***Note: mechanical Twist heads for high precision machining in finishing conditions on 5 axes with continuous movement of the head axes require a preheating cycle also for the head axes.***

| HEAD | Rotary axes preheating speed [rpm] | Movement angle [degrees] | Preheating time [minutes] |
|---|---|---|---|
| Twist Head | 2.5 | 45 | 15 |
| | | | TIN-0097 |

## 2.1.8 SPINDLE KINEMATICS (FPT gear with boring bar)

Drive is by means of an AC motor (1) via belt (2) transmitted to a series of gears (gearbox 3), directly to the spindle (4), which can be connected to a milling head if required.

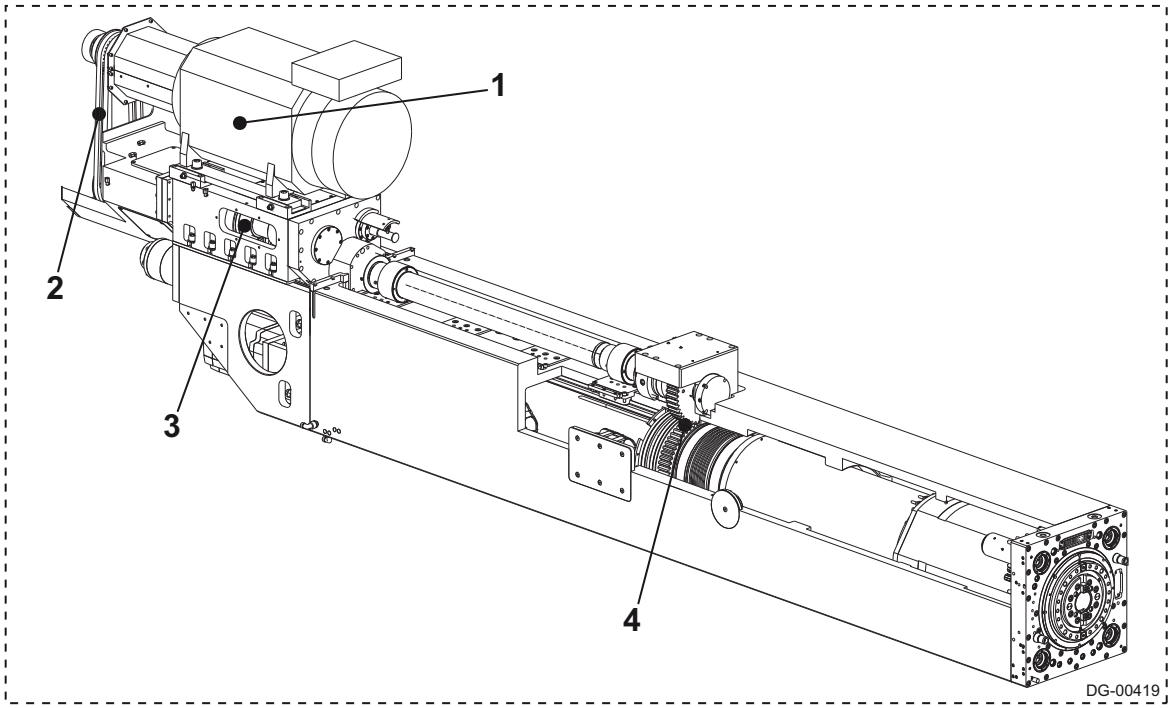


### 2.1.8.1 Boring bar axial movement

The axial movement of the boring bar is transmitted by motor (A), directly in line with the boring bar transfer screw.
The movement of the boring bar is detected by a measuring system built-into the boring bar guide.

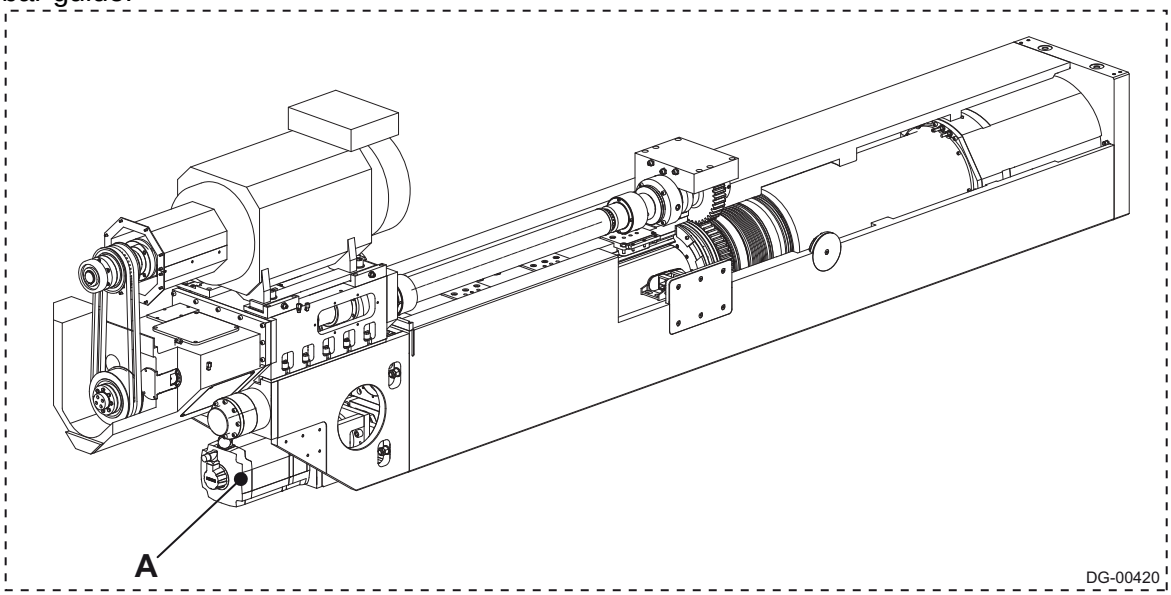

## 2.1.8.2 Power/torque diagram (SUB-180)

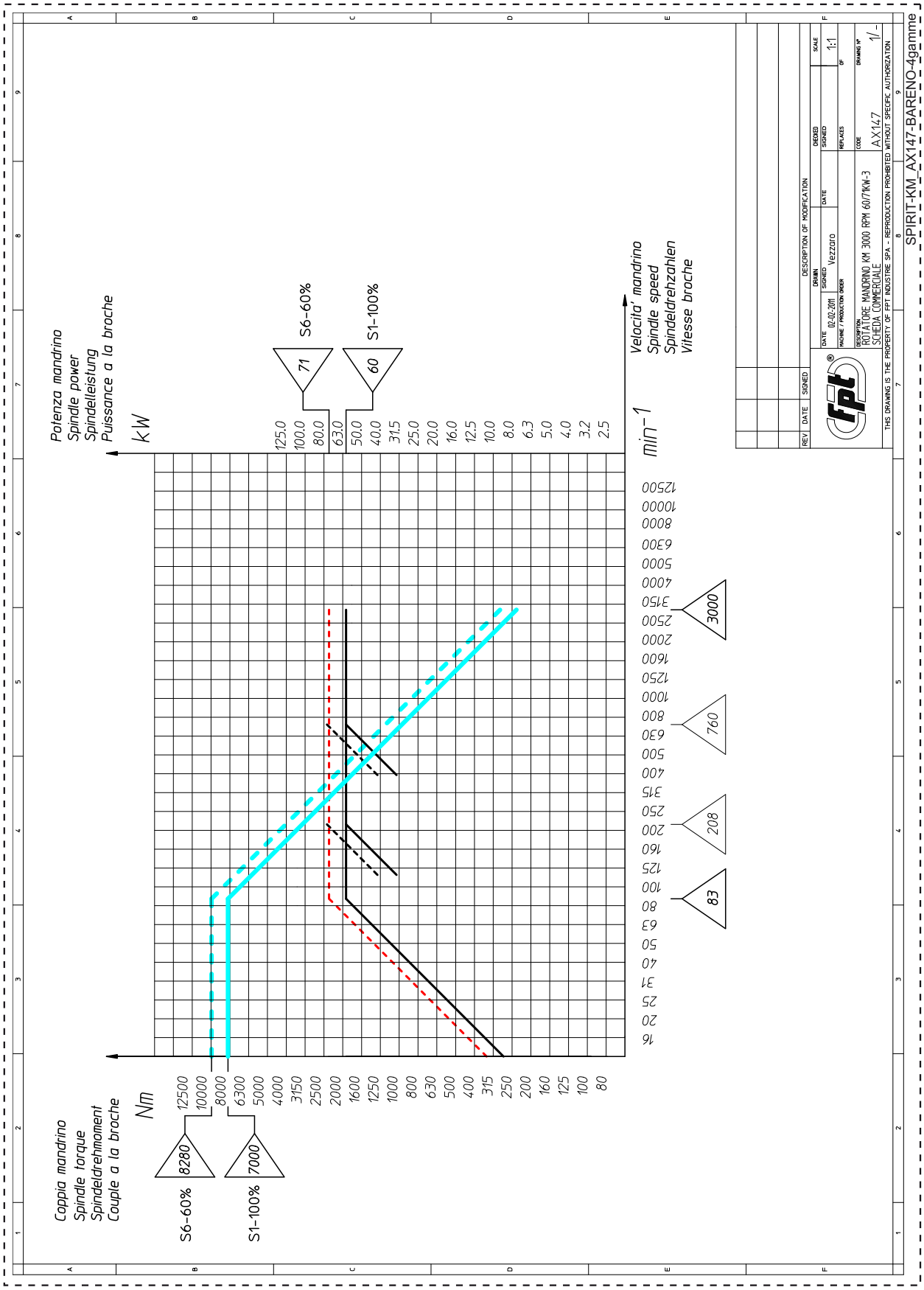

## 2.1.8.3 Power/torque diagram (TO-BS)

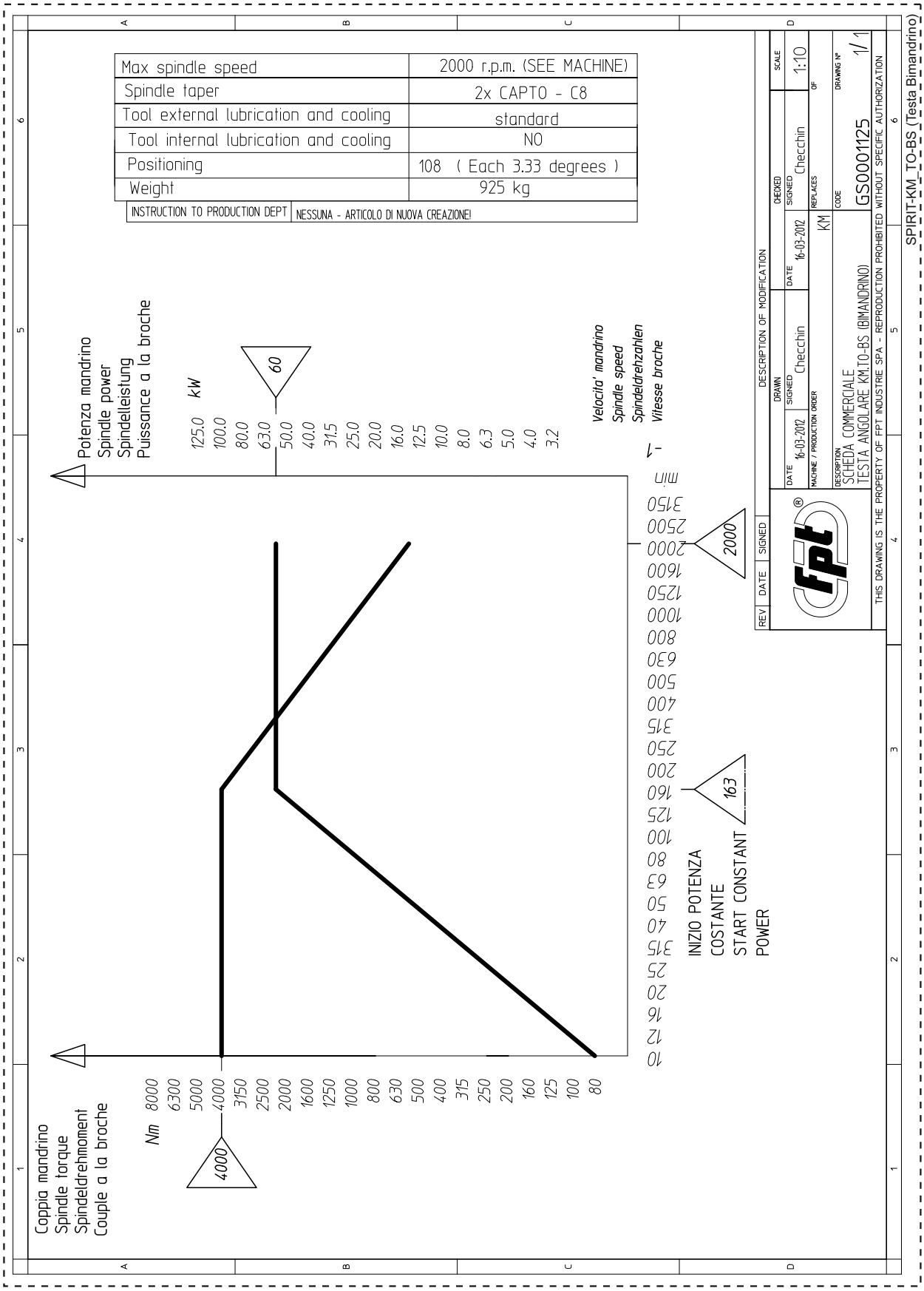

## 2.1.8.4 Power/torque diagram (TUPC)

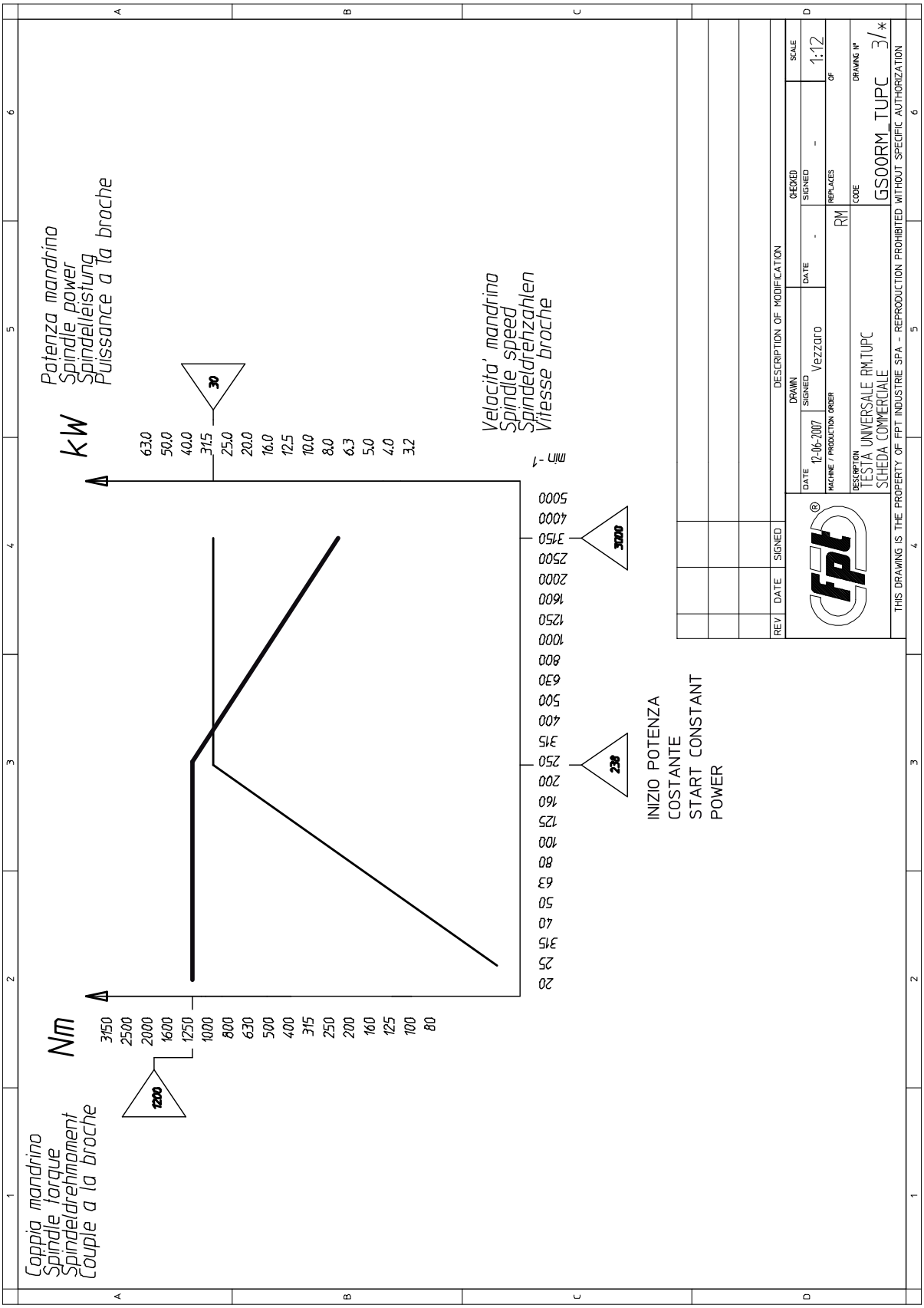

## 2.1.9 SPINDLE NOSE

### 2.1.9.1 Toolholder attachment

The spindle nose is prearranged to accept 7:24 toolholder tapers size ISO 50, which can comply with the following standards, depending on each case:

- DIN 69871 (equivalent to ISO 7388-1:1983)
- DIN 2080 (equivalent to ISO 297:1988)
- ANSI B 5.50/CAT

We also supply a version for the following toolholder type:

- HSK A 63 - DIN 69893

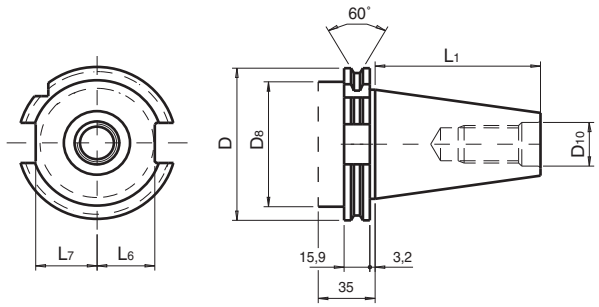


**DIN 69871 Teil 1 Form A**
(ISO 7388/1)

| SK Nr. | $L_1$ mm | D mm | $D_8$ max. mm | $D_{10}$ mm | $L_6$ mm | $L_7$ mm |
|---|---|---|---|---|---|---|
| 50 | 101,75 | 97,50 | 80 | M 24 | 35,5 | 37,7 |

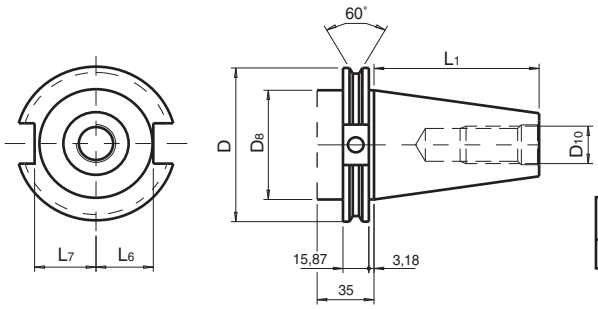


**ANSI B 5.50/CAT**
(ANSI/ASME B 5.50-1885)

| SK Nr. | $L_1$ mm | D mm | $D_8$ mm | $D_{10}$ mm | $L_6$ mm | $L_7$ mm |
|---|---|---|---|---|---|---|
| 50 | 101,6 | 98,4 | 70 | M 24 | 35,3 | 37,2 |

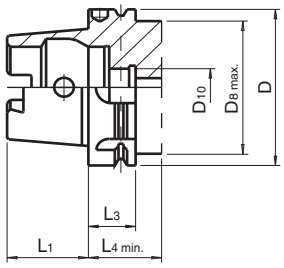


**HSK**
**DIN 69893 Teil 1 Form A - E**

| HSK | $L_1$ mm | D mm | $D_8$ max. mm | $D_{10}$ mm | $L_3$ mm | $L_4$ mm |
|---|---|---|---|---|---|---|
| 40 | 20 | 40 | 34 | ---- | 20 | 35 |
| 63 | 32 | 63 | 53 | M18x1 | 26 | 42 |

DG-00103

## 2.1.9.2 Attachment shanks

Coupling of the toolholder to the spindle is performed by means of a standardized shank, size 50, of various types:

- DIN 69872
- MAS BT403 (BT I; a=45°)
- ANSI-CAT

HSK toolholders do not require attachment shanks.
Drawings of the toolholder attachment and the attachment shank specific to the machine are provided at the end of the manual.

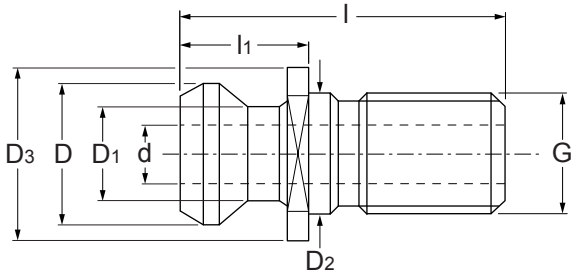


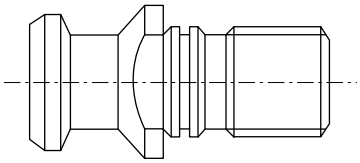

**DIN 69872**

| D | D1 | D2 | D3 | d | G | l | l1 |
|---|---|---|---|---|---|---|---|
| 28 | 21 | 25 | 36 | 20x3 | M24 | 74 | 34 |

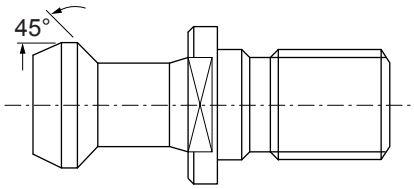


**MAS 403-1982**

| D | D1 | D2 | D3 | d | G | l | l1 |
|---|---|---|---|---|---|---|---|
| 23 | 17 | 25 | 38 | -- | M24 | 85 | 45 |

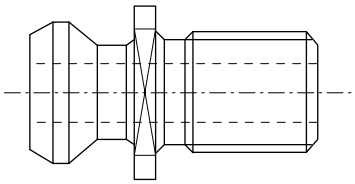

**ANSI-CAT**

| D | D1 | D2 | D3 | d | G | l | l1 |
|---|---|---|---|---|---|---|---|
| 29 | 19,6 | -- | 37 | 11,5 | M24 | 59 | 25,55 |

DG-00008

☞ ***Each machine is built and calibrated in relation to a specific choice of toolholder taper and attachment shank; the use of mixed tools is not permitted;***

***The choice of toolholder taper and attachment shank is subject to limitations and must be discussed at the time of the order.***

GENERAL "SPINDLE" WARNINGS

All spindles and tool attachment systems are inspected and calibrated in the FPT works to ensure perfect coupling and efficient clamping of the tool during machining operations and correct release for tool change cycles.

***Nonetheless, ensure that you always use toolholders and drawbars with the following characteristics:***

- ***Strictly standardized dimensions***
- ***Top quality construction***
- ***Perfect condition***
- ***Clean***

***These conditions are essential to ensure safe and effective clamping of the tool in the spindle, thereby obtaining:***

- ***High precision machining work***
- ***Maximum tool life***
- ***Constant spindle precision***
- ***Reduced risks caused by incorrectly or insecurely clamped tools***

***Tools may be left inserted on the spindle for a limited time only (one or two shifts), this is to preserve the life-expectancy of the Belleville springs on the spindle, by limiting thus the amount of strain exerted in the hook-up/release phases of the tool in the spindle. Furthermore, it is to be remembered that a prolonged period of insertion of the tool cone on the spindle is not advisable as the dirt and humidity which collects between the bodies may lead to the development of corrosion phenomena .***

***Spindles with HSK tool cone must not be utilized without the "TOOLHOLDER" installed.***

***Failure to observe this prescription can result in serious damage to the tool cone locking collet.***

***Tools used on the electric spindles must be balanced dynamically with degree G2.5 according to standards VDI 2060 or ISO 1940.***

## 2.1.10 MACHINE TECHNICAL DATA TABLE

| SPIRIT | | | |
|---|---|---|---|
| **DESCRIPTION** | **UofM** | **VALUE** | **NOTES** |
| Longitudinal stroke (X) | mm | 14000 | |
| Vertical stroke (Z) | mm | 5000 | |
| Cross stroke (Y) | mm | 1500 | |
| Working feed rates | mm/min | 5000 | |
| Fast feed rates | mm/min | 25000 | |
| Maximum thrust on axes (X,Y, Z) | from N | 4000 | |
| Spindle motor power (continuous working S1) | kW (HP) | See the power & torque chart | |
| Spindle motor power (intermittent working S6 – 60%) | kW (HP) | | |
| Spindle speed range at constant torque | rev/min | | |
| Spindle speed range at constant power | rev/min | | |
| Maximum spindle torque (continuous working S1) | Nm | | |
| Maximum spindle torque (intermittent working S6) | Nm | | |
| Supply voltage | V AC | 400 | (-10%, +10%) CEI EN 60204-1 |
| Supply frequency | Hz | 50 | (+/- 1%) CEI EN 60204-1 |
| Absorbed current | A | 303 | |
| TOTAL INSTALLED POWER | kW (HP) | 179,2 (243,7) | |
| | | | TIN-T001-r2 |

## 2.2 TEST CERTIFICATE

All machines and systems manufactured by FPT Industrie S.p.A. are subjected to rigorous geometrical and functional testing before they are shipped.
Geometrical testing of travelling column or T type milling machines is performed in compliance with ISO 3070 ("conditions of acceptance of milling machines/boring machines - checking precision"; parts 1, 2, 3, 4 depending on the configuration) and the series of ISO 230 standards ("machine tool testing regulations"). ISO 3070 standards are implemented by DIN 8620 (German standards), while ISO 230/1 test conditions are implemented by DIN 8601.
The attached "test certificate" contains the geometrical values measured at the FPT works before the machine was shipped to the Customer; these values must be taken as references rather than as binding because of the numerous external conditions (mainly related to the foundations) that can affect the measurements. Final testing of the installed machine is performed in accordance with the same protocol. In all cases the values measured must fall within the range of tolerances permitted by the relevant standards.

## 2.3 TECHNICAL DOCUMENTATION ATTACHED TO THE REFRIGERATION UNIT

***FPT buys in the refrigeration unit from qualified Manufacturers. For technical and maintenance information refer to the Manufacturer's specific documentation which is attached to the manual (Chapter 12 "Attached Documentation").***

## 2.4 DOCUMENTATION FOR THE TOOL MAGAZINE (OPTIONAL)

***FPT buys in the tool magazine from qualified Manufacturers. For technical and maintenance information refer to the Manufacturer's specific documentation, which is attached to the manual (Chapter 12 "Attached Documentation").***

## 2.5 TECHNICAL DOCUMENTATION ATTACHED TO THE CHIP CONVEYOR (OPTIONAL)

***FPT buys in the chip conveyor from qualified Manufacturers. For technical and maintenance information refer to the Manufacturer's specific documentation which is attached to the manual (Chapter 12 "Attached Documentation").***

## 2.6 TECHNICAL DOCUMENTATION ATTACHED TO THE MEASURING PROBES (OPTIONAL)

FPT buys in the measuring probes from qualified Manufacturers. For technical and maintenance information refer to the Manufacturer's specific documentation which is attached to the manual (Chapter 12 "Attached Documentation").